Steelmaking Ladle Project

Title:	LPS Steelmaking Ladles
Procurement ID / Reference	2021-WHY-PMT-0082
Description:	Design and supply materials, provide technical support during installation for the Steel Ladle
SCOPE OF WORK	8th Sept 2021
Proposed contract trial period	2 linings initially to evaluate performance Option to extend to 5 linings
Business Unit	Steelmaking
Procurement Representatives	Graham Eagles
Position	Contracts manager
Phone	+61 448 270 902
Email	Graham.eagles@libertygfg.com
Site Representative	Gary Sheasby
Position	Refractory Specialist Leader
Phone	+61 407 900 695
Email	Gary.Sheasby@libertygfg.com

Contents

1. Scope of Work 3
1.2 Out of the Scope of Work 3
1.3 Steelmaking Key Requirements: 3
2. Background: 3
2.2 Facilities 3
2.3 Chemistries 4
Table 1 – Steel Chemistries 4
2.4 Tap Temperatures 4
2.5 Ladle volume 4
3. Slag chemistry 5
3.2 IRUT Slag Chemistries: 5
Table 2 – Slag Chemistries (IRUT) 5
3.3 LMF Slag Chemistries: 5
Graph 1 – V Ratio vs MgO 5
Table 3 – Slag Chemistries (LMF) 5
4. Current Refractory Lining performance 6
5. The Key Performance Indicators (KPI's) 6
6. Quality assurance 6
6.2 Manufacturing Data Record 6
6.3 Inspection and Test Plans 6
6.4 Certificates of Compliance 7
6.5 Warranty – Premature failure 7
7. Testing and Commissioning 7
8. Administration of Works 7
8.2 Variation to Scope of Works and Additional or Extra Work 8
8.3 Brick handling 8
9. Company supply of materials and Resources 8
10. Contractor supply 8
11. Drawings and Documents 8
12. Timing 8
13. Tender documents required 9
14. Drawing Specification References 9

Reference Number	Why-PMT 0082 RFQ
Requisition Number	N/A
Department	Steelmaking
Project	Steelmaking Ladle Project
Contractor Controller	Gary Sheasby

1. Scope of Work

Liberty GFG Primary Steel (LPS) Steelmaking Plant, Whyalla South Australia, would like to invite your business to offer a Refractory Lining Strategy for the steel ladle, including managing a profile which will meet Steelmaking requirements.

The offer should include lining design, supply of the appropriate materials and technical support for installation and trials.

Trials are considered complete once KPIs have been achieved and a minimum of 5 linings achieve or exceed the target life.

1.2 Out of the Scope of Work

Out of scope are the slide gate system, including plates, upper and lower nozzles.

1.3 Steelmaking Key Requirements:

A ladle refractory lining designed to:

Have a ladle volume increased to accommodate 130 tonnes to 135 tonnes with a minimum of 300 mm free board.

Include a refractory Installation strategy for the new lining design proposed – see Table 4 for current performance of the various lining components

Achieve a steel shell temperature in the barrel and in the slag line to be less than 300 ^{0}C and 320 ^{0}C respectively.

Provide technical support for the refractory installation, sign off on the quality of the installation and monitor performance of the ladle refractory in operation

These will be the basis for performance KPI's.

2. Background:

2.2 Facilities

The steelmaking department produces about 1.1 Mtpa tonnes through both the Billet caster and Combi caster.

The facilities consist of a Desulphurization plant, two BOS converters and two secondary stations; Injection Refining Up Temperature (IRUT) and Ladle Metallurgy Furnace (LMF).

The Refractory area has a Bridge Crane with a maximum lifting capacity of 2.4 tonnes.

2.3 Chemistries

A summary of the aim ranges for Carbon (C) & Manganese (Mn) is shown in Table 1 Chemistries.

As shown in this table about 70% of the steel is Silicon killed.

		Chemistry Aims				
	Products	**%C**	**%Mn**	**%Si**	**%Al**	**Volume, t**
Combi Caster	Blooms:					
	Rails	0.74 -0.82	0.8 - 1.2	0.2 -0.3		220000
	Structural sections	0.15 - 0.22	1.3 -1.6	0.1 -0.2		
	Slabs:					
	Structural sections	0.15 - 0.22	1.3 -1.6	0.015	0.02	200000
	Export	0.04 -0.2	0.2 - 1.0	0.02 -0.2	0.045	100000
Billet Caster	Re-bar	0.15 - 0.22	0.6 - 1.2	0.15 - 0.25		
	Spring & General Purpose Wires	0.3 - 0.84	0.55 - 0.85	0.2 - 1.0		
	Automotive	0.4 - 0.65	0.7 - 1.0	0.2 -0.3		
	Auto Springs	0.5 - 0.65	0.75 - 0.95	1.75 - 2.05		
	General Engineering	0.16 - 0.35	0.7 - 1.6	0.3 - 1.0		
	Low Carbon wires	0.035 - 0.085	0.25 - 0.4	0.1- 0.2		525000
	Fasteners	0.08 - 0.12	0.4- 0.5	Max 0.03		
	Fine wire	0.03 - 0.06	0.26-0.6	Max 0.05		5000

Table 1 – Steel Chemistries

2.4 Tap Temperatures

Most of the billet production is 127X127 mm billets with casting times between 60 and 70 minutes, which forces to schedule the plant in an overlapping mode between the two casters for most of the time.

This in combination with the limit capability of the IRUT station to hold heats causes the Tap Temperatures to be quite high. Typically, between 1670 and 1720 ^{0}C.

It forces also the LMF to carry out extensive reheating cycles as to maintain production levels the furnace needs to tap a few ladles in front of the LMF.

The production split is 70% LMF and 30% IRUT heats.

2.5 Ladle volume

The steel tap into the steel ladle is typically 126 tonnes of liquid steel with a variation of ±5 tonnes. Work is being carried out to reduce the slag carried over to ≤ 5 Kg/tonne. The current lining design limit the maximum volume of the steel ladle to 130 tonnes so for new linings the Melter decreases the total charge to the furnace to reduce the tap amount.

Still, many times the steel needs to be decanted to create a minimum of 300 mm of free board.

3. Slag chemistry

3.2 IRUT Slag Chemistries:

Deox	Fe Ele	FeO	SiO2	Al2O3	CaO	MgO	Mn Ele
Si K	11	14	18	10	51	10	4
Al K	5	6	15	22	51	8	5

Table 2 – Slag Chemistries (IRUT)

3.3 LMF Slag Chemistries:

Slags with low V ratio are used in purpose to achieve the correct non-metallic inclusions in Silicon killed spring steels and in some high Carbon wires.

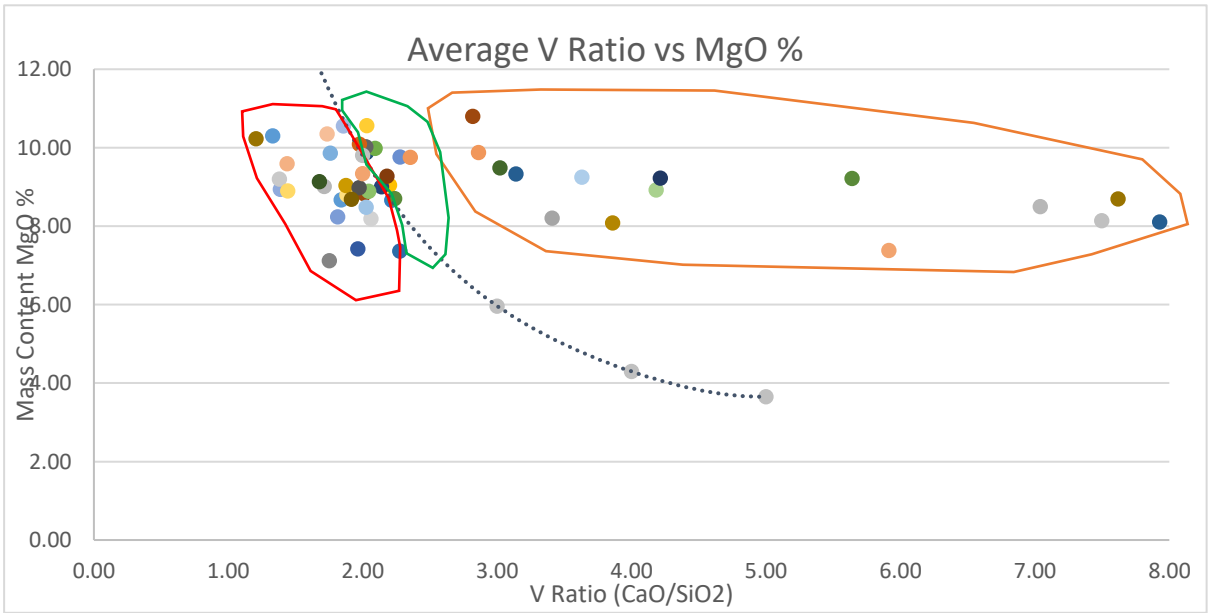

Graph 1 – V Ratio vs MgO

MgO Saturation	CaO	MgO	SiO2	Al2O3	Fe	Mn	V Ratio
Oversaturated	54	9	15	19	3	2	3.5
Saturated	56	10	24	15	2	1	2.3
Undersaturated	51	9	30	12	2	1	1.7

Table 3 – Slag Chemistries (LMF)

4. Current Refractory Lining performance

Currently the ladle has Barrel (wear Lining Bricks) and Slag line bricks.

There are two shapes for the barrel bricks difference being the thickness (200mm & 150mm respectively).

Target lives are shown in Table 1 – Ladle Working Components.

Ladle working lining components	Barrel Working Lining (thickness & target lives)	
	Target Heats	
	200 mm	150 mm
Slag line	> 60	> 60
Barrel area	> 180	120
Blocks	>60	> 60
Floor lining (1st)	120	120

Table 4 – Ladle Working Components

5. The Key Performance Indicators (KPI's)

You are expected to provide a design, support and product that achieves these KPI's

1. Additional Tonnes of capacity above 130 tonnes
2. Refractory performance achieving or exceeding the Refractory performance as shown in table 4
3. Ladle shell temperature performance against Refractory contractor proposal as shown in 1.3 point 3 above (Steel shell temperature)
4. Provision of technical data sheets/drawings, MSDS data sheets and temperature profile through the lining and steel shell

6. Quality assurance

The Contractor shall plan, establish, implement and maintain a quality system according to the requirements of ISO 9001-2015. Alternative quality standards to ISO 9001-2015 may be acceptable provided the Contractor can demonstrate that the system elements in this alternative standard are equal to or better than the requirements of ISO 9001-2015

6.2 Manufacturing Data Record

The supplier will be required to compile three copies of a Manufacturing Data Record (MDR) for the works and any subsequent variations for the works completed under this scope. The MDR shall include but not be limited to:

6.3 Inspection and Test Plans

The inspection and test plan (ITP) shall detail the dimensional inspection, manufacturing process control plan (PCP) and the material and product testing plan (PTP).

Please supply an example of a typical PCP and PTP for refractory design, manufacture and supply.

6.4 Certificates of Compliance

Certificates proving the compliance of any material or component with the relevant standard.

Each delivery of refractory product must be accompanied by a full certification of compliance to the agreed material and dimensional specification by manufacturing batch codes and date of manufacture.

Please provide an example of your standard delivery certification report within your tender document.

6.5 Warranty – Premature failure

The contractor shall provide their company written warranty guarantees for supplied quality and in use performance of their ladle refractory products, designs, supply performance and technical services.

The contractor shall take full responsibility for any premature failure of refractories within the ladle during normal operating conditions as described above in this document.

The contractor shall submit their penalty limitations and support commitment in the event of a premature failure of their refractory products

7. Testing and Commissioning

The contractor shall complete testing and commissioning of the lining installed, including but not limited to the following:

- Compliance to installation method.
- Heating schedule.
- Representation on site, if possible, during the installation and heating.

Note; heating is via Natural Gas Vertical Heater. Contract Administration

8. Administration of Works

The Contractor Controller named on Page 1 of this Specification will administer this scope of works.

During the progress of the Works, the Contractor should address all questions or technical issues relevant to this Scope of Works to the Contractor Controller named on page 1 of this specification.

8.2 Variation to Scope of Works and Additional or Extra Work

The Contractors attention is drawn to The Company's Standard Conditions of contract in general and in particular, that no extra work or work of an altered value or class shall be undertaken or executed by the Contractor until they've received a valid updated purchase order with sufficient funds prior to commencement.

8.3 Brick handling

Where bricks are proposed there is a requirement to ensure they are delivered as a non-slip item. This can be done during manufacturing or coated post production at the contractors' expense.

9. Company supply of materials and Resources

The Company will, at no charge to the Contractor, provide the following for use in the execution of the ladle refractory work: -

The company will provide experienced refractory installation resources, adequate safety management, supervision, access and material handling services following the contractors design and installation instructions / proposal.

10. Contractor supply

The Contractor shall supply technical support, refractory design, refractory lining instructions, checklists, drawings, specifications, quality certifications, material safety data sheets, refractory materials and signoff of initial lining builds.

11. Drawings and Documents

The Contractor Controller is to ensure that all drawings and documents distributed are SIMEC Mining / Liberty Primary Steel – Whyalla Steelworks owned.

The documents listed in the table below form part of this Scope of Work and shall be read by the Contractor in conjunction with this document.

Document Title	Document No.	Rev
1. Steel Ladle 130 Tonne	154130 4	1/4/21
2. 130 Tonne Steel Ladle Arrangement	116270	J

12. Timing

The Work shall commence on a date agreed by both parties. Actual start date and start time may vary and the contractor must liaise with the Contractor controller to set dates and time.

13. Tender documents required

In preparing the tender the contractor will supply the following additional documents at tender stage

1. Provide a 4-stage plan for the tender
    - Intention to tender
    - Technical support and Design
    - Quotation to meet all the requirements of this scope of work
    - Delivery lead-time from date of purchase order
2. Schedule for the project indicating major steps in the project, total duration, tasks, critical dependencies and lead-time to possible installation.
3. Work method statement.

    The following will be required;

    - A copy of all drawings, specifications, methodology concepts
    - Technical support capability
    - Company references of similar contracts and steel ladle designs
    - Pricing schedule

14. Drawing Specification References

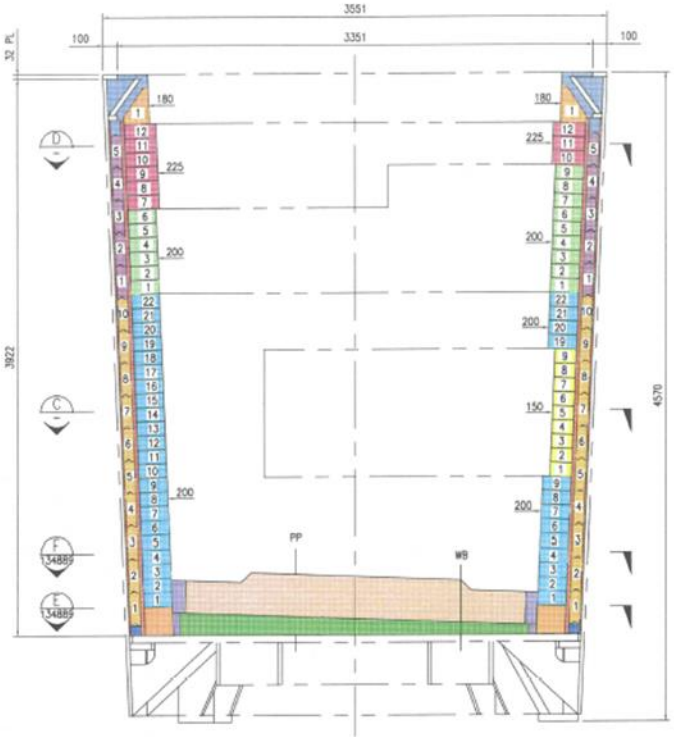

SECTION A
NOT TO SCALE

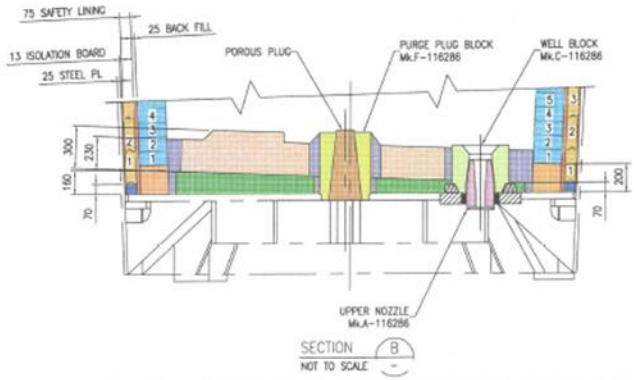

SECTION B
NOT TO SCALE

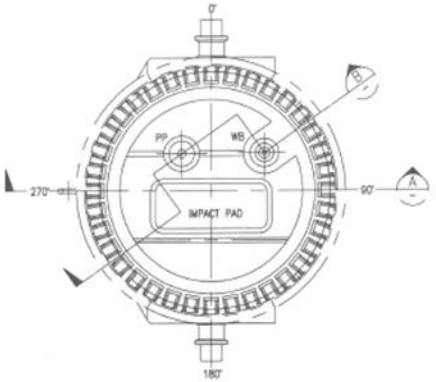

130 TONNE STEEL LADLE – PLAN VIEW
NOT TO SCALE

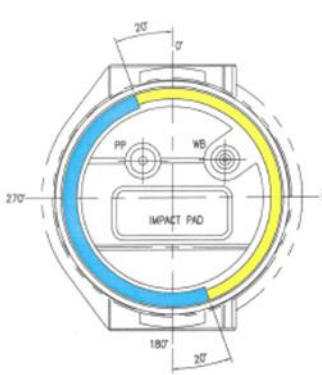

SECTION C
NOT TO SCALE

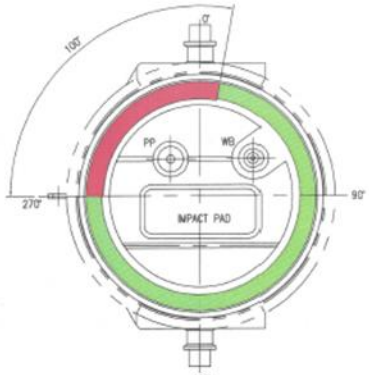

SECTION D
NOT TO SCALE

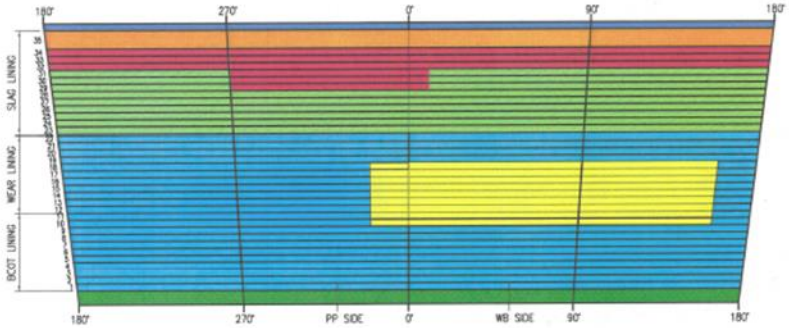

REFRACTORY INSTALLATION ARRANGEMENT
NOT TO SCALE

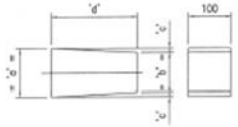

WALL BRICK DETAIL
SCALE 1:5

BRICK	WEAR PANEL #1	WEAR PANEL #2	WEAR LINING #1	WEAR LINING #2	SLAG LINING #1	SLAG LINING #2	SLAG LINING #3
'a'	116	115	115	115	114	115	115
'b'	112	100	106	95	108	110	87
'c'	2	7.5	4.5	10	3	2.5	14
'd'	150	150	200	200	200	225	225

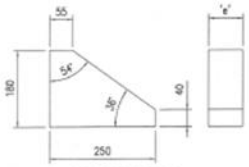

LIP BRICK DETAIL
SCALE 1:5

BRICK	LIP BRICK #1	LIP BRICK #2
'e'	80	70

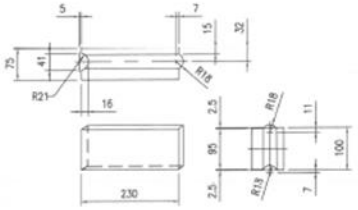

SAFETY BRICK DETAIL
SCALE 1:5

73 SAFETY BRICK
73 SLAG SAFETY BRICK
180 LIP BRICK #2
LIP BRICK #1
223 SLAG LINING #3
SLAG LINING #2
200 SLAG LINING #1
200 WEAR LINING #2
WEAR LINING #1
150 WEAR PANEL #2
WEAR PANEL #1

SAFETY STARTER
BOOT STARTER
PURGE PLUG
WELL BLOCK
POROUS PLUG
UPPER NOZZLE

BACK FILL-LIP
BACK FILL-NOZZLE
BACK FILL-WALL
FLOOR
SAFETY FLOOR
ISOLATION BOARD

REFERENCE DRAWINGS:

116270 – 130T STEEL LADLE ARRANGEMENT
116284 – 130T STEEL LADLE LIP DETAILS
116285 – 130T STEEL LADLE POROUS PLUG ASSEMBLY & DETAILS
116286 – 80S STEEL LADLE FT80 SLIDE GATE NOZZLE REFRACTORIES
134889 – PRE-CAST WEAR FLOOR & SAFETY FLOOR DETAILS
134890 – PRE-CAST REPLACEABLE IMPACT PAD DETAILS

No. OFF	MARK No.	DESCRIPTION	MATERIAL	MASS/UNIT	REMARKS	SAP MATERIAL NUMBER

BASIC OXYGEN STEELMAKING PLANT AREA
STEEL/ SLAG TRANSFER & TEEMING CRANES
STEEL LADLES – 130 TONNE STEEL LADLE
REFRACTORY ARRANGEMENT

LOCATION: 1 COL.
CAPITAL NOTIF.
Revisions CAD. REF.

DATE : 1.04.2021 SCALE : 1:AS NOTED

	NAME	SIGNATURE
DRAWN	C. DE KOCK	
CHECKED	G. SHEASBY	
REVIEWED	I. MURGAS	
AREA MANAGER	MANOJ KUMAR	

BOA	SST	SLD	DRF	
BOA	SST	SLD	RFS	
BOA	SST	SLD	ARR	

GFG ALLIANCE

THIS DRAWING & ALL COPYRIGHT IN IT IS THE PROPERTY OF "GFG ALLIANCE" & IS STRICTLY CONFIDENTIAL.

154130 4

NOT FOR CONSTRUCTION
REVIEW ONLY

Any PRINTED copies of this procedure are UNCONTROLLED

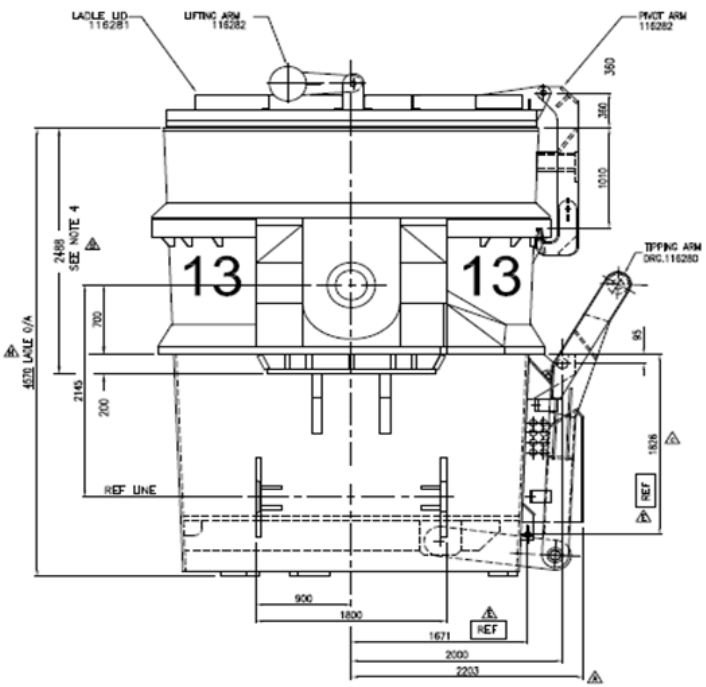

VIEW OF LADLE FROM NORTH SIDE *

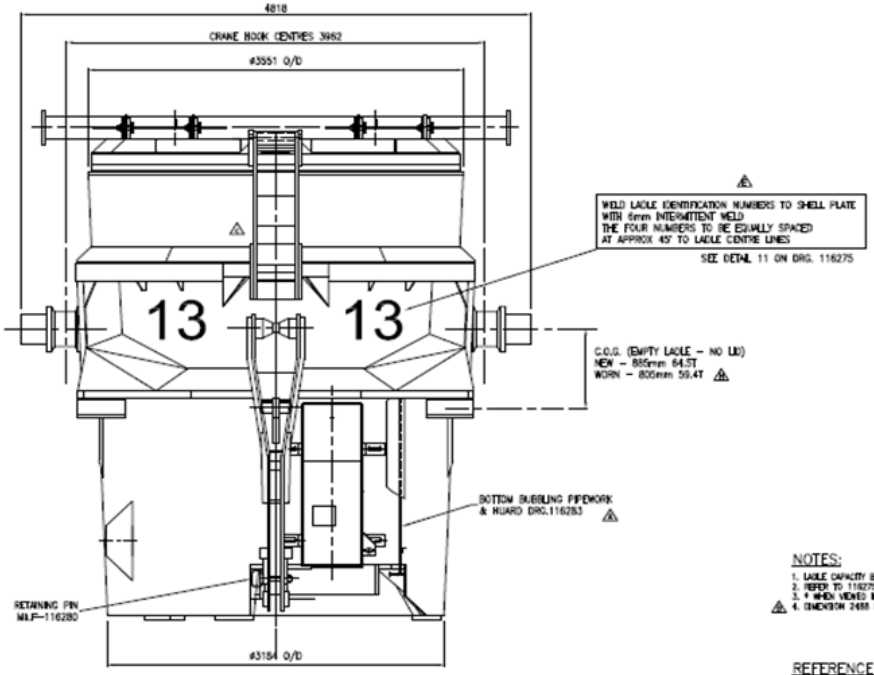

VIEW OF LADLE FROM WEST SIDE *

NOTES:

1. LADLE CAPACITY BASED ON 75mm SLAG LAYER AND 300mm FREEBOARD
2. REFER TO 116275 FOR GENERAL NOTES & ITEM DESCRIPTIONS.
3. * WHEN VIEWED IN THE TEEMING AISLE DURING NORMAL USE.
4. DIMENSION 2488 IS CRITICAL FOR CORRECT FIT OF THE LADLE ON EQUIPMENT IN STEELMAKING AREA.

REFERENCE DRAWINGS:

- 116484 – SLIDE GATE ARRANGEMENT & CROSS SECTIONS
- 116269 – SLIDE GATE CASSETTE EXPLODED VIEW
- 116268 – SLIDE GATE SKIRT ASSEMBLY & DETAILS
- 116271 – 130T STEEL LADLE DETAILS 1/4
- 116272 – 130T STEEL LADLE DETAILS 2/4
- 116273 – 130T STEEL LADLE DETAILS 3/4
- 116274 – 130T STEEL LADLE DETAILS 4/4
- 116275 – 130T STEEL LADLE MATERIAL LIST & LADLE NUMBERS
- 116279 – 130T STEEL LADLE SG SLIDE BLOCKS & LOCATIONS.
- 116277 – 130T STEEL LADLE SG PADS & REQUIRED STANDARDS
- 116278 – 130T STEEL LADLE SG BRACKET DETAILS
- 116279 – 130T STEEL LADLE CYL PROTECTION COVER, WEDGE & AIR PIPE DETAILS
- 116280 – 130T STEEL LADLE LIGHTWEIGHT TIPPING & CONNECTING ARM DETAILS
- 116281 – 130T STEEL LADLE LID DETAILS
- 116282 – 130T STEEL LADLE LID PIVOT ARM, LIFTING ARM & PIN
- 116283 – BOTTOM BUBBLING PIPEWORK ARRGT & DETAILS
- 116284 – 130T STEEL LADLE LP ARRGT & DETAILS
- 116285 – BOTTOM BUBBLING PLUG ASSEMBLY & DETAILS
- 135440 – SLIDE GATE OPERATING HYDRAULIC CYLINDER
- 135634 – LADLE NOZZLE ARRANGEMENT

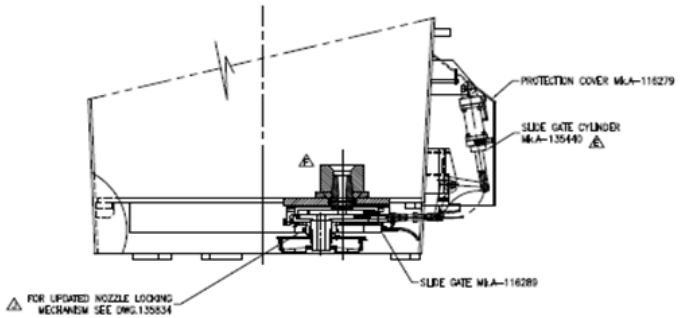

SCRAP SECTION THRU' SLIDE GATE

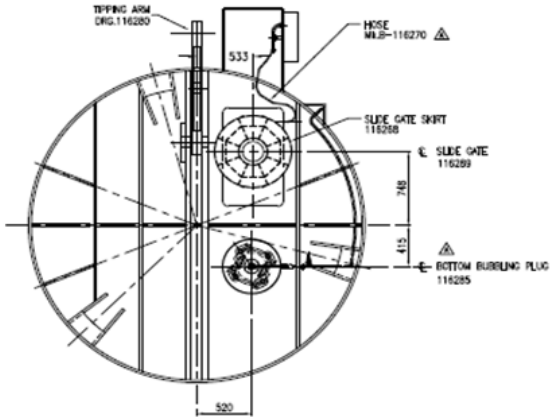

VIEW OF LADLE FLOOR FROM BELOW

No. OFF	ITEM	MARK No.	DESCRIPTION	MATERIAL	MASS/UNIT	REMARKS
1		A-135440	SLIDE GATE CYLINDER			
1		116289	SLIDE GATE ASSEMBLY			
1		A-116283	BOTTOM BUBBLING PIPEWORK			
1		B-116282	LIFTING ARM			
1		A-116282	LID PIVOT ARM			
1		A-116281	LID			
1		F-116280	RETAINING PIN			
1		A-116280	TIPPING ARM LIGHTWEIGHT			
1		A-116279	PROTECTION COVER			
S/C 161687	1	B-116270	HOSE ASSY, SS 316L, CORRUGATED BORE(NOM ID 10mm±2mm OD, c/w 1-1/16" x1.0, 4P-4 FITTING, TO REQUIRED EACH END- NOT SWAGED. FLEXIBILITY: TAKING TYPE Fig-1 OR EQUIV. ONE END TO HAVE A 3/4" FEMALE BRASS SWIVEL STRAIGHT THROUGH SERIES P/No.507185. OVERALL LENGTH 1100mm.			WEKALA HOSE & FITTINGS SUPPLY
1		A-116270	130 TONNE STEEL LADLE			

BASIC OXYGEN STEELMAKING PLANT AREA
STEEL/SLAG TRANSFER & TEEMING CRANES
STEEL LADLES
130 TONNE STEEL LADLE ARRANGEMENT

LOCATION: COL. 1

DATE : 28.08.01 | SCALE : 1:20

	NAME	SIGNATURE
DRAWN	M.Young	
CHECKED	R.Payton	
REVIEWED		
C. ENG.	P.Shirley	

BOA | SST | SLD | ARR

MNDESIGN

934177 W.O. No.

DR. REL

onesteel whyalla

116270 J

LOUISINOX PTY. LTD. 39 PLYMPTON ROAD WORKFIELD SOLD NORTH ADELAIDE (ACN 007 804 992)

THIS DRAWING & ALL COPYRIGHT IN IT, IS THE PROPERTY OF Onesteel & IS STRICTLY CONFIDENTIAL.

Any PRINTED copies of this procedure are UNCONTROLLED